DS-2CD1A23G0-IZU
2 MP Varifocal Bullet PT Network Camera

- High quality imaging with 2 MP resolution
- Pan, tilt and zoom ability that enables the camera to capture larger and interested areas
- Water and dust resistant (IP66)
- EXIR 2.0, advanced infrared technology with long IR distance
- Efficient H.265+ compression technology

▪ Specification

Camera	
Image Sensor	1/2.7" Progressive Scan CMOS
Max. Resolution	1920 × 1080
Shutter Time	1/3 s to 1/100, 000 s
Min. Illumination	Color: 0.007 Lux @ (F1.6, AGC ON), 0 Lux with light
Day & Night	IR cut filter
Angle Adjustment	Pan: -100° to 100°, tilt: -20° to 45°
Lens	
Lens Type	Varifocal lens, motorized lens, 2.8 to 12 mm
Focal Length & FOV	2.8 to 12 mm, horizontal FOV 106.9° to 32.3°, vertical FOV 56.4° to 18.2°, diagonal FOV 127.9° to 37°
Lens Mount	Ø14
Iris Type	Fixed
Aperture	Max. F1.6
DORI	
DORI	Varifocal lens: Wide: D: 44 m, O: 17 m, R: 8 m, I: 4 m Tele: D: 136 m, O: 54 m, R: 27 m, I: 13 m
Illuminator	
Supplement Light Type	IR
Supplement Light Range	Up to 50 m
Smart Supplement Light	Yes
IR Wavelength	850 nm
Video	
Main Stream	50 Hz: 25 fps (1920 × 1080, 1280 × 720) 60 Hz: 30 fps (1920 × 1080, 1280 × 720)
Sub-Stream	50 Hz: 25 fps (640 × 480, 640 × 360) 60 Hz: 30 fps (640 × 480, 640 × 360)
Video Compression	Main stream: H.265+/H.265/H.264+/H.264 Sub-stream: H.265/H.264/MJPEG
Video Bit Rate	32 Kbps to 8 Mbps
H.264 Type	Baseline Profile/Main Profile/High Profile
H.265 Type	Main Profile
Bit Rate Control	CBR/VBR
Region of Interest (ROI)	1 fixed region for main stream
Audio	
Audio Type	Mono sound
Environment Noise Filtering	Yes
Audio Sampling Rate	8 kHz/16 kHz
Audio Compression	G.711ulaw/G.711alaw/G.722.1/G.726/MP2L2/PCM/AAC-LC
Audio Bit Rate	64 Kbps (G.711 ulaw)/64 Kbps (G.711 alaw)/16 Kbps (G.722.1)/16 Kbps (G.726)/32 to 160 Kbps (MP2L2)/16 to 64 Kbps (AAC-LC)

Network	
Security	Password protection, complicated password, HTTPS encryption, 802.1X authentication (EAP-MD5), watermark, IP address filter, basic and digest authentication for HTTP/HTTPS, WSSE and digest authentication for Open Network Video Interface, RTP/RTSP over HTTPS, security audit log, TLS 1.2, host authentication (MAC address)
Simultaneous Live View	Up to 6 channels
API	Open Network Video Interface (Profile S, Profile G), ISAPI, SDK
Protocols	TCP/IP, ICMP, DHCP, DNS, DDNS, HTTP, HTTPS, RTP, RTSP, NTP, UPnP, IGMP, IPv6, UDP, QoS, Bonjour, FTP, 802.1x, SMTP
User/Host	Up to 32 users 3 levels: Administrator, Operator and User
Client	iVMS-4200, Hik-Connect
Web Browser	Plug-in required live view: IE 10, IE 11 Local service: Chrome 57.0+, Firefox 52.0+
Image	
Wide Dynamic Range (WDR)	120 dB WDR
SNR	≥ 52 dB
Day/Night Switch	Day, Night, Auto, Schedule
Image Enhancement	BLC, HLC, 3D DNR
Image Settings	Mirror, saturation, brightness, contrast, sharpness, gain, white balance adjustable by client software or web browser
Privacy Mask	4 regions of privacy mask
Interface	
Ethernet Interface	1 RJ45 10 M/100 M self-adaptive Ethernet port
On-Board Storage	Built-in memory card slot, support microSD/microSDHC/microSDXC card, up to 256 GB
Built-in Microphone	Yes
Reset Key	Yes
Event	
Basic Event	Motion detection, video tampering alarm, exception
Linkage	Upload to FTP/memory card, notify surveillance center, send email , trigger recording, trigger capture
General	
Power	12 VDC ± 25%, 0.91 A, max. 11 W, Ø5.5 mm coaxial power plug, reverse polarity protection, PoE: 802.3af, Class 3, 36 V to 57 V, 0.34 A to 0.21 A, max. 12.5 W
Material	Front cover: metal, body: plastic, bracket: plastic
Dimension	197.1 mm × 105 mm × 225.4 mm (7.8" × 4.1" × 8.9")
Package Dimension	300 mm × 266 mm × 172 mm (11.8" × 10.4" × 6.8")
Weight	Approx. 900 g (2 lb.)
With Package Weight	Approx. 1520 g (3.3 lb.)
Storage Conditions	-30 °C to 60 °C (-22 °F to 140 °F). Humidity 95% or less (non-condensing)
Startup and Operating Conditions	-30 °C to 60 °C (-22 °F to 140 °F). Humidity 95% or less (non-condensing)
Language	English, Ukrainian
General Function	Anti-flicker, heartbeat, password protection, password reset via e-mail

Approval	
EMC	CE-EMC: EN 55032: 2015, EN 61000-3-2:2019, EN 61000-3-3: 2013+A1:2019, EN 50130-4: 2011 +A1: 2014, RCM: AS/NZS CISPR 32: 2015, IC: ICES-003: Issue 7, KC: KN32: 2015, KN35: 2015, FCC: 47 CFR Part 15, Subpart B
Safety	UL: UL 62368-1, CB: IEC 62368-1: 2014+A11, CE-LVD: EN 62368-1: 2014/A11: 2017, BIS: IS 13252 (Part 1): 2010/IEC 60950-1: 2005
Environment	CE-RoHS: 2011/65/EU, WEEE: 2012/19/EU, Reach: Regulation (EC) No 1907/2006
Protection	IP66: IEC 60529-2013

▪ Available Model

DS-2CD1A23G0-IZU (2.8 to 12 mm)

▪ Typical Application

Hikvision products are classified into three levels according to their anti-corrosion performance. Refer to the following description to choose for your using environment.

This model has NO SPECIFIC PROTECTION.

Level	Description
Top-level protection	Hikvision products at this level are equipped for use in areas where professional anti-corrosion protection is a must. Typical application scenarios include coastlines, docks, chemical plants, and more.
Moderate protection	Hikvision products at this level are equipped for use in areas with moderate anti-corrosion demands. Typical application scenarios include coastal areas about 2 kilometers (1.24 miles) away from coastlines, as well as areas affected by acid rain.
No specific protection	Hikvision products at this level are equipped for use in areas where no specific anti-corrosion protection is needed.

▪Dimension

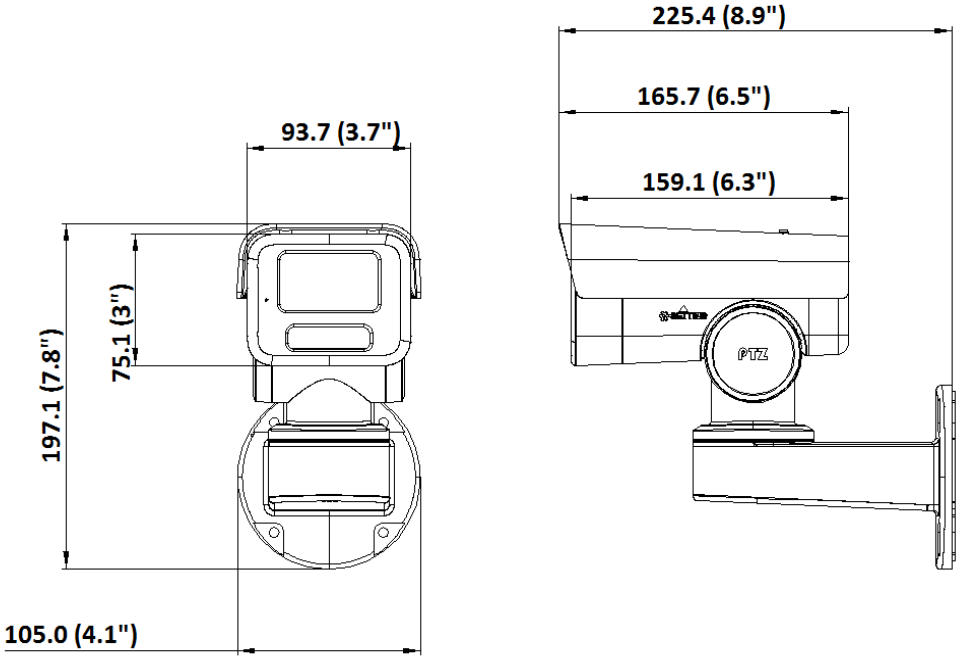

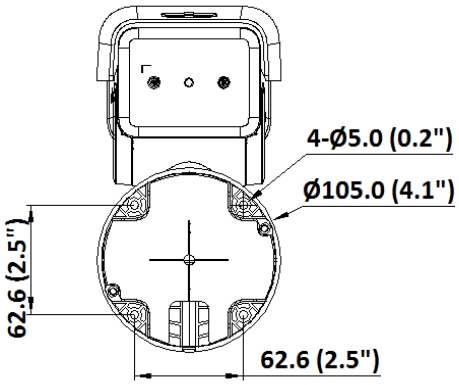

Unit: mm (inch)

Distributed by

Headquarters
No.555 Qianmo Road, Binjiang District,
Hangzhou 310051, China
T +86-571-8807-5998
overseasbusiness@hikvision.com

Hikvision USA
T +1-909-895-0400
sales.usa@hikvision.com

Hikvision Europe
T +31-23-5542770
sales.eu@hikvision.com

Hikvision UK & Ireland
T +01628-902140
sales.uk@hikvision.com

Hikvision UAE
T +971-4-4432090
salesme@hikvision.com

Hikvision Russia
T +7-495-669-67-99
saleru@hikvision.com

Hikvision Australia
T +61-2-8599-4233
salesau@hikvision.com

Hikvision Italy
T +39-0438-6902
info.it@hikvision.com

Hikvision South Africa
Tel: +27 (10) 0351172
sale.africa@hikvision.com

Hikvision Singapore
T +65-6684-4718
sg@hikvision.com

Hikvision Korea
T +82-(0)31-731-8817
sales.korea@hikvision.com

Hikvision India
T +91-22-28469900
sales@pramahikvision.com

Hikvision Brazil
T +55 11 3318-0050
Latam.support@hikvision.com

Hikvision France
T +33(0)1-85-330-450
info.fr@hikvision.com

Hikvision Spain
T +34-91-737-16-55
info.es@hikvision.com

Hikvision Poland
T +48-22-460-01-50
info.pl@hikvision.com

Hikvision Canada
T +1-866-200-6690
sales.canada@hikvision.com

Hikvision Turkey
T +90 (216)521 7070- 7074
sales.tr@hikvision.com

Hikvision Kazakhstan
T +7-727-9730667
nikia.panfilov@hikvision.ru

Hikvision Tashkent
T +99-87-1238-9438
uzb@hikvision.ru

Hikvision Indonesia
T +62-21-2933759
Sales.Indonesia@hikvision.com

Hikvision Thailand
T +662-275-9949
sales.thailand@hikvision.com

Hikvision Malaysia
T +601-7652-2413
sales.my@hikvision.com

Hikvision Vietnam
T +84-974270888
sales.vt@hikvision.com

Hikvision Hong Kong
T +852-2151-1761
info.hk@hikvision.com

Hikvision Colombia
sales.colombia@hikvision.com

© Hikvision Digital Technology Co., Ltd. 2020 | Data subject to change without notice |